same way-- one position bypasses the amp (and turns power to the amp off) and the other goes to the input of the amplifier. The "bypass" audio line from the amp switch is tied to the output from the amplifier, and goes to the source connector on the headphone jack.

The SCAF was wired internally with ordinary hookup wire, and the SCAF was a bit susceptible to RF (principally from my nearby 2M rig), so I did all the internal audio wiring with mini coax. While I was at it, I replace the "gain control" trim pot on the audio amp with an off-board pot on the back of the SCAF enclosure. It's not really a gain control, of course, just a 50K pot across the input to the amp.

The external speaker is a 10" Jensen PA speaker that I got at a swap fest for a buck, and unlike the car speaker and the RS speaker that I tried, will not distort when driven with a full power (1W) signal at 700Hz. It works very well, and makes a world of difference in terms of convenience. 73, Marshall Emm, AA0XI/ VK5FN

Adding Sidetone & Receive Offset to the Pixie, the TiCK Way

by Charles J. Ludinsky, K1CL
cjl@mail09.mitre.org

Two of the most requested modifications to the Pixie2 are sidetone and receive offset. Since I was planning on building a TiCK keyer into one of my Pixies, I saw a good opportunity to add both features with a minimum number of additional components. Sidetone is included as a basic feature of the TiCK; the main issue is how to couple it into the Pixie. Offset can be implemented by duplicating the keying transistor circuit, and using it to switch a small capacitor in and out of a series connection with the crystal.

The basic approach is to use the TiCK keyer board (supplied by Embedded Research) essentially without change, and to add only three additional, off-board components to implement the sidetone and offset features. In the "just do it if it works" tradition of the Pixie2 (exemplified by the manner in which the audio amplifier is muted by shorting its power supply), I simply connected the audio line of the TiCK keyer through a resistive divider and capacitor (located on the keyer board) to the headphone jack. This approach works reasonably well, despite the fact that the keyer audio is "fighting" against the low impedance of the audio power amp. This results in considerable audio distortion while in the TiCK programming mode, that is, when the amplifier is turned "on". However, the tones are still quite intelligible. During transmission (with the amplifier effectively turned off), the keyed sidetone is relatively undistorted. The sidetone level is set by the ratio of R6 to R7. Values given in the diagram are what I found reasonable; however, these can be set to whatever values give the best volume.

For offset, I duplicated the keying transistor circuit (using one transistor, Q3, and one resistor, R5), with the collector/ emitter junction connected across a small capacitor (C12) in series with the crystal to ground. A trimmer capacitor of about 5 to 50 pF is used, allowing the offset tone to be adjusted as desired. This circuit seems to work quite well, with no apparent chirp or other problem, despite the lack of a DC collector voltage. Tests with and without DC current through the transistor showed no appreciable difference in frequency shift, chirp, etc. One additional change that might be useful (not shown in the diagram) is an SPST switch across the capacitor; this allows the offset to be turned off when desired.

These changes give a whole different flavor to the Pixie -- almosts feels like a "real" rig. The addition of a simple audio filter, such as that used in the W1FB ver-

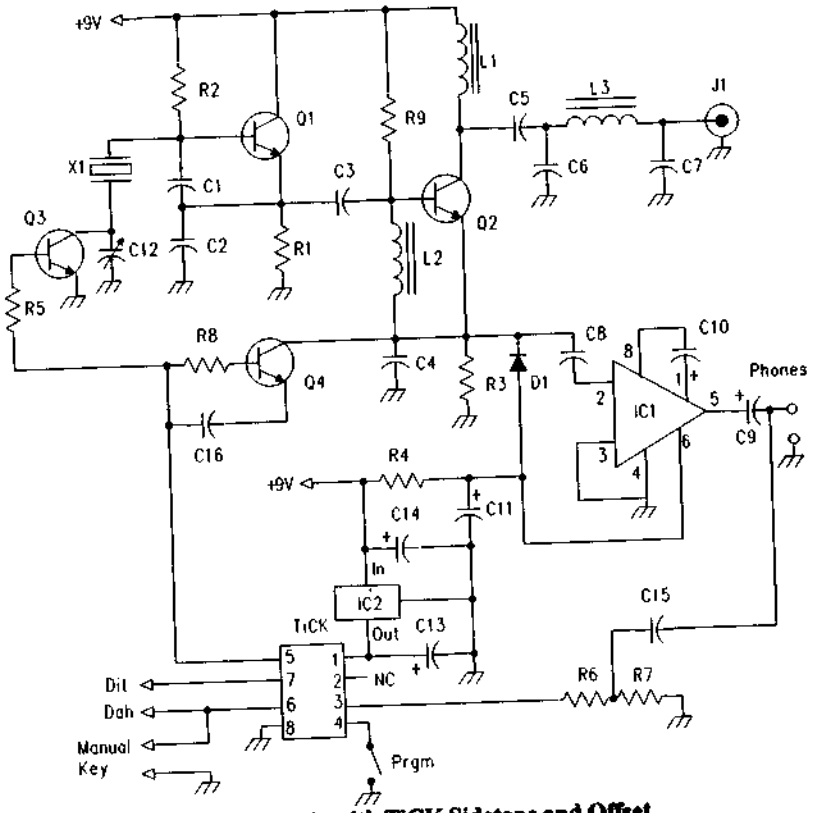

K1CL Pixie with TiCK Sidetone and Offset

sion of the Pixie should help even more. However, all of these additions do increase the complexity of what was originally meant to be the ultimately simple transceiver.

Parts List:

C1,2	100pF
C3	82pF
C4	.05uF
C5,15	.01uF
C6,7	820pF
C8	.1uF
C9,10,11	10uF/16V
C12	5-50pF Variable Cap
C13,14	1uF/16V
C16	.001uF
D1	1N914
IC1	LM386
IC2	78L05
IC3	TiCK Keyer Chip
J1	BNC Antenna Connector
L1	15uH
L2	100uH
L3	2.2uH
Q1,3,4	2N2222
Q2	2N3053
R1	1.5K
R2	47K
R3	10K
R4	1K
R5,6,8	4.7K
R7	8.2K
R9	33K
SW1	N.O. Momentary PB Switch

Good luck and I hope that you enjoy your "Pixie" as much as I have. 72, Chuck, K1CL