these ferrites at HF; they will overheat due to loss at flux levels well below saturation. Eight to ten turns on a toroidal core or 10-15 turns on a rod are typical values for the HF range. Winding impedance increases approximately as the square of the number of turns.

Add RIT to the Pixie 2

by Jeff Furman KD6MNP
1449 Yukon Dr.
Sunnyvale, CA 94087
Jfurman@strata.com

I was browsing QRP-L late in December, 1995, when I encountered the messages of Nick Franco, KF2PH. He described his experiences with the Pixie 2 QRP transciever. I had built one of these, too.

What interested me was Nick's struggle with RIT. The usual problem with direct conversion transcievers without RIT is they receive on one frequency, and transmit on a different frequency. The transmit frequency is, of course, the oscillator frequency, but the receive frequency is actually determined by your preferred beat note frequency. The receive frequency is either (really, both) above or/and below the transmit frequency by your favorite pitch. For example: If my oscillator generates 7.110 MHz, and I like 1 kHz pitch, then I will be transmitting on 7.110 MHz, but receiving on 7.111 and 7.109 MHz without the benefit of RIT. Two transcievers operating like this can't use the identical transmitting frequency, but they must transmit on frequencies separated by the beat note. Some guys like low tones, while other like higher, but, both sides must hear the same pitch without RIT.

Example: I transmit on 7.110 MHz, receive on both 7.111 MHz and 7.109 MHz. You must then transmit on either 7.111 MHz (which means you receive 7.110 and 7.112 MHz) or 7.109 MHz (then you receive on 7.108 and 7.110 MHz). Notice that each of us is listening to a different unwanted sideband. QRM misery can visit us in these extra sidebands.

Now, RIT can't solve the double sideband problem of direct conversion receivers, but the frequency offset of the two transmitters can be fixed. What RIT does is offset the oscillator between receive and transmit by the desired beat note. Now my oscillator transmits on 7.110 MHz, as always, but the RIT shifts the oscillator by my favorite 1 kHz when I receive. So, during receive, my RIT circuit shifts my oscillator down 1 kHz to 7.109 MHz, and I am receiving 7.110 MHz and 7.108 MHz. Now I can receive the same frequency I transmit, yet I can adjust the beat note to my satisfaction independent of the other station. Note in this RIT example, I could have shifted my oscillator up by 1 kHz instead, receiving on ??? (the quiz part) frequencies.

I think that's enough of the what and why of RIT, so, on to the important HOW of RIT. Now back to Nick. Nick used a series inductor capacitor network for pulling the crystal. This is well established technique. For example, August 1995 QST has a construction article using this. The QST article suggested mysterious (to me) series inductors instead of a single inductor. The circuit subtleties for optimizing the pulling range are unnecessary for the limited range of RIT. Nick first used a variable capacitor, then he tried two capacitors in parallel, with one of them switched in/out of the circuit for RIT.

When I read about his using a manual rx/tx switch for RIT, I immediately knew how to solve the switch problem. The problem was how to somehow change the capacitance of the crystal pulling network from transmit to receive. My short answer is to use the voltage across the key to operate a varicap that shunts the capacitor in the pulling network. With the key up, receiving, there's voltage across the key, relatively constant (I'll ignore the audio signal that's

there). Key down, it's zero volts. By some stroke of luck, a resistor is across the key. I changed this to a pot of the same value (the ends of the pot go where the 10K ohm resistor was.) Now, when the key is up, in receive, the pot wiper may be adjusted to control the RIT offset. Key down, both ends of the pot at ground, wiper voltage is zero, for fixed transmit frequency. What's still needed is the connection between the pot wiper and the varicap. This is a largish resistance (100k ohms or higher), it dissipates no power, so 1/4W, 1/8W etc. is okay. Since it has no steady current through it (the varicap changes its capacitance by varying the reverse bias across the junction) the value isn't too critical, however extremely large values (I'll guess greater than 1 meg ohm) might start to cause hearable chirp.

To summarize, start with the original Pixie 2 circuit, replace the 10K resistor across the key by the two ends of the RIT adjustment 10K pot. Lift up the ground end of the crystal and connect it to one end of an 18 microhenry choke (another like the one in the collector of the final/mixer.) The other end of this choke connects to one side of a 82 picofarad capacitor (another like the coupling cap between the osc. and final/mixer.) Also at this connection is the CATHODE end of a varicap (I used a Motorola MVAM 109, but I'm advised that a common rectifier diode such as 1N4001 to 1N4007 might also work as a varicap), and that largish dc coupling/rf isolating resistor (I had 150K ohms.) Ground the free end of the 82pF. cap and the ANODE of the diode or varicap; finally the free end of the new resistor connects to the wiper of the 10K ohm RIT adjustment pot.

I guess that's five parts (can you get a trade in allowance for the old 10K resistor?) This circuit pulls my 7.125 MHz crystal down to about 7.110 MHz in transmit, with a few kHz adjustment in receive. I didn't use a counter, so that's a guess. I bet you could replace that fixed 82pF capacitor with a variable (no, it doesn't have to be 82pF.—probably a 50, or a 150, or even a 365 pF variable would work) to move the transmit frequency, too. The RIT will interact with the adjustment of this cap, however.

I adjusted the RIT using my Sierra. I had to wrestle it out of my son's hands to use it. First, I vaguely recall that the Sierra has no tx/rx offset when the received beatnote is the same pitch as the sidetone and its RIT is off. Okay. Pixie key down driving dummy load, etc. tune Sierra for same received pitch as Sierra sidetone. Now Pixie key up, (whew, that tiny plastic final in the Pixie can overheat) Sierra transmitting (NOT into the Pixie directly) adjust Pixie RIT for desired beatnote (don't change Sierra tuning here.) That's how I did it.

Now some caveats and observations. I confess, I did not use an LM386. I designed my own two transistor audio amp. I did it because I was dipping into a small plastic bag with cheap two cent plastic transistors in it, and I would have to excavate my junk box to find some (rarer and dearer) LM386's. Plus it was fun to design and build it. The basic design is in "Solid State Design for the Radio Amateur" ARRL, 1986 by W. Hayward and D DeMaw. I recommend it. Yes, you, too, can fill an 8-1/2 x 11 sheet of paper with mile long algebraic expressions (of course, just for fun.) Seriously, I consider it a practical exposure to the arts and sciences of solid state circuits.

Back to the Pixie. A main feature of this amp is that it has gain of about 2000 or so, maybe ten times the maximum LM386 gain; but it needs hi-z headphones. I use Trimm Featherweights. I don't shut it down the way the original Pixie 2 shuts down the LM386. This means that the voltage across the key in my Pixie is probably lower in receive than with the LM386 circuit. Your RIT adjustment may have a greater range than mine, or it may be more (or too) sensitive an adjustment. Your mileage may vary. The specific values I used for the various parts were what spares I had left from building the plain Pixie. A look at the QST article suggested that I was in the ballpark, and the proof of the pudding...I spent no effort to temperature compensate the varicap. Be my guest.

I only briefly imagined what the varicap does to the oscillator's waveform or harmonic content. Especially around zero bias, the capacitance varies (nonlinearly, even) with voltage. Watch out for the back wave. I noticed sufficient output in receive to drive an amplifi@ed resistive reflection coefficient bridge very well. Of course, it's at least an order of magnitude (10 dB) or more down, but that's still a second signal. (how about FSK for RTTY?)

Now for the interesting part. I am working on a scheme to add sidetone to the Pixie. My secret weapon is that discrete amplifier. All the nodes of that circuit are exposed to my whims... I need to add a switch transistor, however. Either stage may be shunted by an R-C phase shift network to make that stage oscillate at an audio frequency, with the switch transistor, driven by the good ol' voltage across the key, shorting out the middle of that network in receive, to allow oscillation only with key down (sidetone!!) I suspect that something could be done with the LM386 as well; I notice an uncommitted input, some gain adjust nodes are assessable..... who knows? SSB next? 72, Jeff, KD6MNP

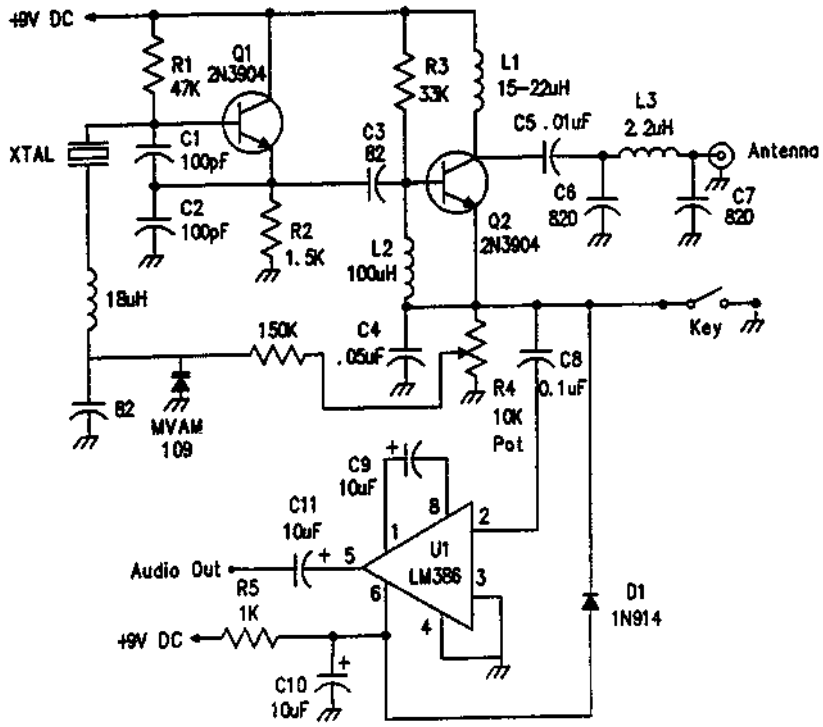

Pixie 2 With RIT