stations or the guy down the street, can sometimes be nearly as loud as the noise pulses you're trying to mask.

If you turn the gain up too high, you'll find out exactly what I mean: the noise amplifier will become saturated with these large signals, Q3 will pass the signals on to the NE602, and you'll hear an assortment of garbage signals coming through your receiver. Don't do this! Back down the GAIN control if you start hearing new stuff that isn't supposed to be there.

By the way, even commercial noise blankers suffer from this to some degree, but they don't usually admit it. I hope this project helps you work the weak ones!
72, Wayne, N6KR

The Pixie 2: An Update

by Dave Joseph, WA6BOY
1873 Harris Ave.
San Jose, CA 95124

The Pixie 2 first appeared in the third issue of the NorCal QRPp Journal. Doug, KI6DS, recently asked me if I would write another article updating it, since the membership has grown so much and many of the new members have not seen the article.

The circuit first appeared in an issue of the G-QRP Club's "Sprat" and the first issue of QRPp. It was designed by RV3GM. I've modified the circuit's output and audio amplifier.

Although most of the QRP circuits today have evolved into using superhet receivers, a diversion back to direct conversion is not unusual... since QRP, after all, is a unique part of amateur radio and simplicity is certainly a part of it.

The Pixie 2 is a tiny rig, with a standard two transistor transmitter. It's a Colpitts oscillator, left running, and a keyed power amplifier. There is no external mixer used to feed the audio amplifier. Instead, the mixing is done at the final amplifier itself with the resulting audio taken off the emitter.

As you look at the audio amplifier you will certainly notice D1. It is an unorthodox approach, but it works. The diode can be left out but it helped to keep down the "crashes" during keying by shutting down the 386 chip. I'm no wizard at this... I just tried it and it seemed to work. I'm sure there's lots of you that have much better ways.

There's no RIT, a simple switch and cap in parallel, between the crystal will work as an offset though. You'll lose QSK but, here again lies the call for enhancement. The whole idea here was to make a tiny rig that worked, with LOTS of room for improvements, using a minimumb of parts.

Contacts spanning hundreds of miles are routine with this rig on 80 meters. Band changing is simply a matter of pi-network and crystal changing. If you build one, I'm sure you'll have fun with it. Construction can be by any method, perfboard, "ugly" and pc board. Complete parts kits are available for those of you who are interested. (1)
Construction:

You will need a low wattage soldering iron with a small tip, some rosin core solder, solder wick (for removing parts when you make mistakes), small wire cutters, needle nose pliers plus any additional tools you may wish to use. PLEASE PROTECT YOUR EYES WHILE CUTTING LEADS AND SOLDERING COMPONENTS! WARN OTHERS CLOSE BY.

Since all the components, except for U1, are mounted vertically, it's best to start at one end of the board and work to the other. No particular starting point is necessary. Take your time, enjoy the assembly. Your transceiver will be finished sooner than you think.

There's no coils to wind, no alignment either. This is definitely a FUN project.

Note: There is one component that will be mounted on the underside of the board if you build it with the pc board. This is the 1K resistor in the kit. Refer to the drawing on the parts layout for it's location.

Before you get started, note the following parts MUST be installed only one way: The 10uF electrolytic caps, D1 - the diode, the two transistors, and finally, U1 the audio amp chip. Make sure you mount these components exactly as the parts layout shows you to. If you mount any of these the wrong way, your transceiver will not work and you'll probably destroy the part. The only exception is C11, but it is best to install it as shown.

Mount all of the parts, again, starting from one end of the board. Carefully check to see you have the correct part before installing it in it's location. Refer to the parts layout drawing. Double check before inserting the part. This will avoid problems in getting your rig on the air. Install the 1K resistor last. This resistor is R5, and is tack soldered between the 9 Volt pad and the POSITIVE terminal of C10. Dress the leads of this resistor so that they "fly" off the board. You might want to put some sleeving over the leads, or, some electrical tape underneath to be sure they don't short to the board. R5 is shown in dotted lines on the layout.

You will need the following additional items (not supplied in the kit):

2 - RCA jacks, or 3.5 mm jacks. (For Key and Antenna).

1 - 3.5 mono or stereo jack, depending on your headphones.

1 - short piece of RG- 174 For Antenna Connection.

1 - Crystal socket or pair of mini-alligator clips.

This transceiver does not have RIT (receiver offset). It is possible to work other stations, if you are close to their frequency. Even if the received signal is off frequency, give them a call. A simple RIT circuit using a mini-toggle switch and capacitor, hooked up in parallel, and placed in the line between the crystal and ground works well. You won't have full break-in, but it works.

Remember, all that's needed to change bands on this rig is change L3 and the crystal, and you have a rig for another band!! You can use "walkman" style headphones, with a mono adapter. There is even enough audio power to drive a speaker. It's not very loud but you can hear easily in a quiet room ... neat!

This rig has been packaged in a 35 mm film can, a Tic-Tac box, Sucrets box (easy), just to name a few. The enclosure is up to you. One just big enough to hold the rig and the 9 Volt battery will give you a tiny self contained unit.

Many contacts using a simple end fed quarter wave wire, worked against a good ground, have been made with this rig. Most of them have been over hundreds of miles away. The transmit signal is very clean, with no key clicks since the oscillator is always running. Just listen to it! Power output is in the 200 to 300 milliwatt range. You'll be amazed what happens at this power level with a decent antenna.

This is a "bare-bones" rig. Use your ingenuity or, enlist the help of an experienced ham to help enhance the operation of your rig. Refer to QRP articles, like those in QRPp, SPRAT, ARCI and others devoted to QRP operating. If you're not an experienced builder, this kit was designed especially for you. If you've been building circuits,, it's hoped you'll have fun with this little rig and/or help a beginner get started in the wonderful world of QRP.

If you come up with mods for the rig, publish them in QRP. Send Doug reports on your experience building and operating it. There are surplus crystals available for less than a dollar for 3.579MHz and 3.686MHz. For that price, buy one, solder it in and don't worry about changing frequencies.

Enjoy, 72, Dave, WA6BOY

(1) Parts kits for the Pixie 2 are available from: HSC Electronics, 3500 Ryder St., Santa Clara, CA 95051. The cost is $9.95 + $2.00 shipping and handling for the pc board and all board mounted components except the crytal. Chokes will be provided for both 40 and 80 meters. Phone 1-800-4HALTED.

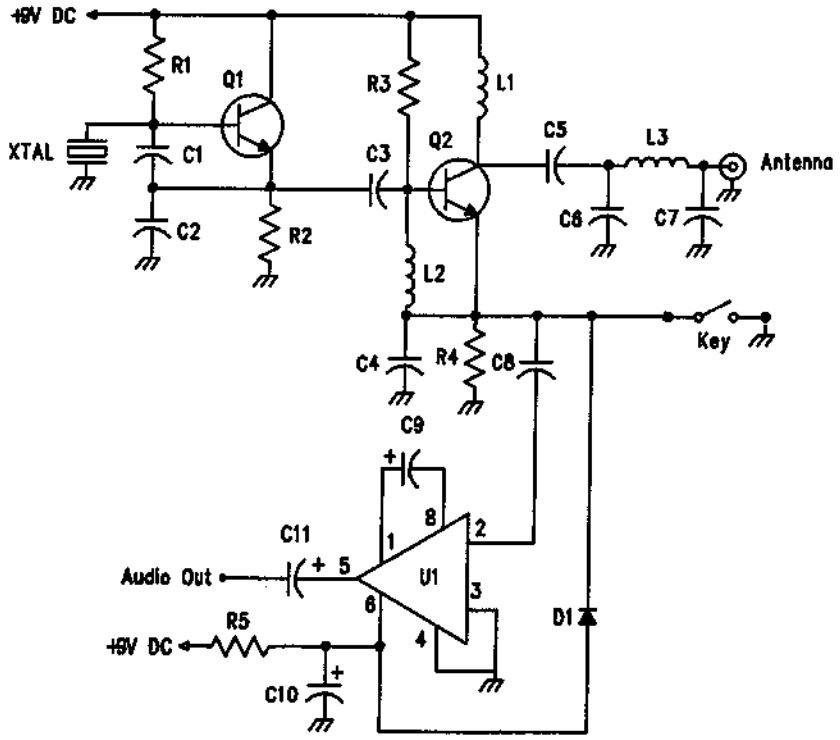

Parts List

C1,2	100pF	C9,10,11	10uF/25V Elec	R1	47K
C3	82pF	D1	1N914	R2	1.5K
C4	.05uF	L1	15 - 22 uH Choke	R3	33K
C5	.01uF	L2	100 uH Choke	R4	10K
C6,7	820pF	L3	40M - 1uH	R5	1K
C8	0.1uF		80M - 2.2uH	U1	LM386

Fig. 1 Pixie 2 Schematic

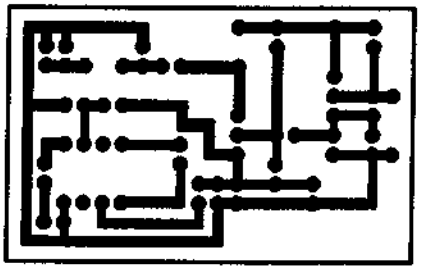

PC Board Foil Side

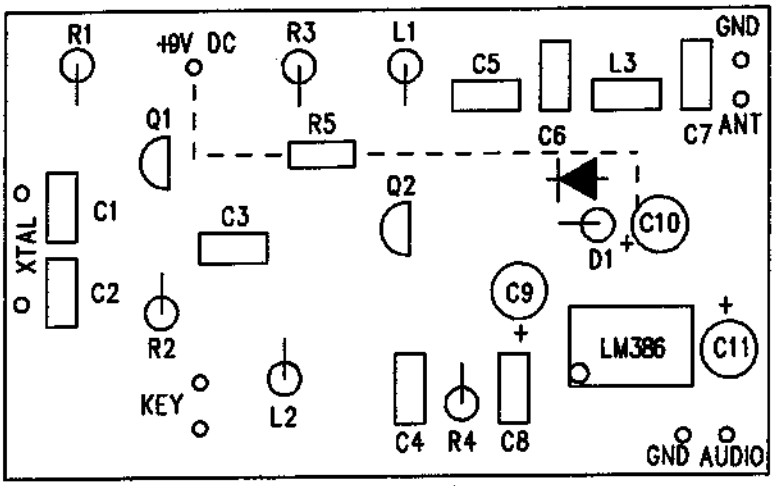

Parts Layout Pixie 2

Improved Selectivity for the Deluxe QRP Station

by Jim Pepper, W6QIF
44 El Camino Moraga
Orinda, CA 94563

[The original article appeared in QRPp, in Volume II, Number 2, June 1994]

After using the QRP receiver in the Deluxe QRP Station, I found that I seldom used the null circuit. It was especially difficult to use in trying to null out a cw signal. Many years ago I ran across an article in Ham Radio (December 1981) on an active filter using a Sallan-and Key circuit that gave more than 40 dB per decade roll off. It was similar to the null circuit so I decided to convert over to this circuit to see if I could improve the selectivity. One of the reasons people don't like the Direct Conversion receiver is because they claim it doesn't have the selectivity of a superhet especially one with a crystal filter. I wanted to see if I could overcome this draw back.

Before making the mod, I used a SPICE program by GEOBAN to get the response I wanted. See the curve in figure 1. I also measured the response of the receiver with an audio oscillator and scope before and after the mod.* They compared quite favorably with these curves. I also asked John Pratt (N1UA) to make the change and he reported similar results. In checking the receiver before the change, he could hear a signal about 4.5kHz away from the peak and after only 1 kHz. I also found the same on my receiver. It definitely is worth the change.

To make the change requires some trace cutting but in all the change is not that great. The attached drawings should be self explanatory. The two resistors by IC3 can be jumpered on the trace side leaving the resistors in. Remove the 1uF tantalum capacitor. Next to IC2 replace the 47K resistor with a 68K. Remove the 10K and replace it with a 0.1uF capacitor.

On the trace side, two cuts are required. One on IC2 as shown and one on IC3. IC3 has three jumpers. Two as I have said before and the third from the 510pF cap to pins 6/7. On IC2, add a 12K resistor across the area where you made the cut. And then add a series circuit composed of a 47K resistor and a 0.1 cap going from the two traces shown.