The Pixie 2

By David Joseph, WA6BOY
1873 Harris Ave.
San Jose, CA 95124

Here is a tiny shirt pocket rig you can take with you.. plus extra info on a sidetone circuit and the next best thing to a VFO, the "VFR".

Look at the circuit of this gem in Fig. 1, particularly Q2. No need for a separate mixer circuit, it's happening right there! This novel idea works very well. I first saw this approach in a circuit by RV3GM in a recent issue of "Sprat", published by the G-QRP Club in England, and also republished in Vol. 1, Issue 1 of QRPp. The original circuit's been modified here from a tapped inductor tank output, different audio amplifier plus additional muting. The rig is full QSK too! When the key is depressed, it grounds the input of the audio amp and the cathode of D1, shutting off the 386 chip. The 1K ohm resistor at pin 6 of the amp does two things; reduces the supply voltage for stability, along with the 10uF cap, and is a current limiter when the key is down. Make sure you place the 10uF cap as close as possible to the 386, otherwise you'll get a nasty howl in your headphones when the amplifier breaks into oscillation.

More about Q2. I used a 2N2222, only for compactness, and get about 200 milliwatts output with it. A 2N3053 or 2N3866 will give more power out, if you can work its size onto the limited space. You might want to mount it underneath. On this version, C3, the 82 pF coupling capacitor, along with C8, C10, D1 and L1 are on the solderside. If you put C3 topside, you might have room for a larger Q2 on the bottom.

Q1, a 2N2222, is in a Colpitts oscillator, a good circuit because any type crystal will work, along with another device which turned out to be a wonderful surprise, and let to what I call the "VFR".

"VFR" stands for "Variable Frequency Resonator". You've probably seen these devices. They're ceramic resonators and function just like a crystal. Another article in "Sprat" by GM3RXU showed how hooking a variable capacitor, as shown in Fig. 2, could "pull" the resonator quite a ways, due mainly to its low "Q". In my circuit, a 365 pF broadcast cap and a resonator for 3.58 MHz, gave a frequency range from 3604 all the way down to 3530. That's 74 KHz! For stability, mount the resonator on the board right next to Q1's circuit. Realize that lead length from the cap to the resonator will change the tuningrange somewhat. Just practice good VFO construction techniques.

The sidetone circuit shown in Fig. 3, also came from "Sprat", (this little quarterly's got a lot of great circuits by very talented people!), and was part of a little 40 meter transceiver design by G0RFD. The diode is again used, in this case to turn on the circuit, where D1 in Fig. 1 turns that one off. If you mount the 555 chip directly on a piece of perfboard and use 1/8 watt resistors above and below the board, you should be able to get it into the film cannister. It's not very heavy and #20 or #22 solid wire would hold it away from the main board.

There is plenty of headphone volume, even with the simple circuit on the 386. Weak stations are easily copied and it'll even drive a small speaker. I've got one of these rigs hooked to one and plop a crystal (or tune the VFR) to a QRP frequency and monitor while building or tinkering away on the bench. In a quiet room, I can hear signals from across the other side while I hunt for parts. (Organized???....Haw Haw!)

A simple fixed pi network couples the output to a 50 ohm load. I used a molded inductor on this version (80 meters) and it works just fine. You can also wind a toroid. Try 20 turns for 80 meters or 14 turns for 40, on a T50-2 core with #24 or #26 wire. The network values are for a very low "Q". Other bands, of course, will work, with appropriate inductance values, along with changes in capacitance to maintain a desired "Q".

Bear in mind that this is a bare bones rig. I've not included transmit or receive offset, so, you're receiving on, or very, very close, to the same frequency as transmitting.

Despite this, my first contact was with W6JTT, who was on a mountain top next to the Mexican border. That's about 500 miles from me, not bad, eh! He was a couple of hundred hertz from my crystal frequency so it worked out fine. If you hear a reasonably low tone then, give it a try! I heard NE6S calling CQ one night, the tone sounded about 700 to 800 Hertz, ("cycles" sounds better to me, oh well). I called, and got an answer! Location? Corona, CA, over 400 miles to the south.

A good CW operator, after calling CQ, stays on the transmitting frequency, and tunes near the frequency for calls, either with a separate receiver or using a transceiver's receiver offset control. That's REAL CW operating, and a blessing for rigs like this one!

By 'dinking' around with some circuitry, an offset can be rigged on this transceiver. You can sacrifice QSK and/or switch in a swmall variable cap for RIT. There are several ways to approach this and still allow the rig to fit in the film can. A slightly larger enclosure will allow easier and greater flexibility. Use your own ideas on this.

The rig has been fun to get going and a real blast on the air. I'd welcome any ideas from you on this article. But, my hope is that you will build one. There's nothing like having a little critter like this to hook up and enjoy.

NorCal 40 Owners: Send in your experiences, mods, and suggestions for the NorCal 40 rig to me for the next issue. I am planning to make the March issue of QRPp an issue featuring NorCal 40 information. Be a part of history! Send your experiences to Doug Hendricks, KI6DS, 862 Frank Ave., Dos Palos, CA. 93620. Deadline is Feb. 1.

Wanted: Suggestions and ideas for the next NorCal project. Send to Wayne Burdick, N6KR, 74 Elm St., San Carlos, CA 94070 or via internet: wayne@interval.com

The Pixie 2

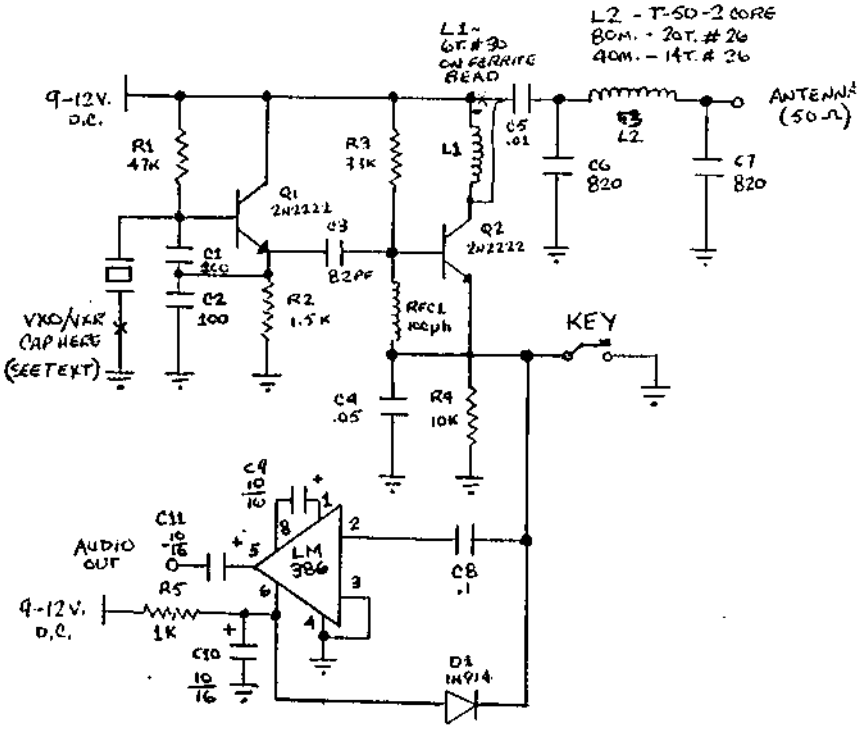

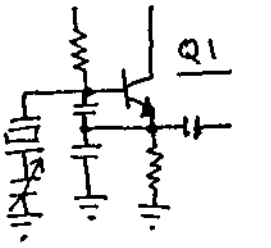

FIG. 2

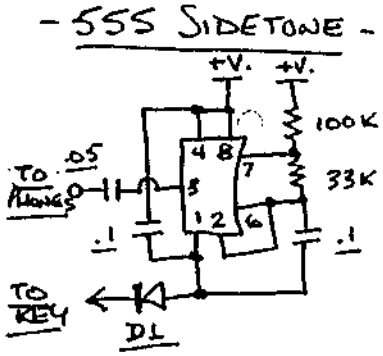

FIG. 3