AN ARDUINO UNO DDS VFO GADGET

By Robert C. Mazur, VA3ROM

Note: This is a supplement to my "All Things Digital" 2-part article "An Arduino DCR-SDR" published in The Canadian Amateur, May/Jun, Jul/Aug 2015 issues. The major difference is that this DDS VFO is a portable and independent gadget that can be used for other projects. Original DCR SDR rotary encoder tuning version was inspired by Richard Visokey, AD7C - http://www.ad7c.com. The original AD9850 control code is by Dr. David Mills, G7UVW - http://www.webshed.org/wiki/G7UVW. The original Arduino rotary encoder code is by Ben Buxton - http://www.buxtronix.net/2011/10/rotary-encoders-done-properly.html.

Note: Ben's original full-step rotary encoder table source code has duplicate '0x10' value, noticed & corrected to '0x20' by blogger 'Ardian' but this error only affects full-step or "naked" encoders and not the KY-040 "brick" and other half-step encoders.

SOFTWARE

Use the latest version of the Arduino IDE (http://www.arduino.cc) currently v1.6.5. The program source code is heavily annotated so even those unfamiliar with programming should be able to follow the program logic. *Note: The source code for this project is called DDS_VFO.ino and is located in the DDS_VFO ZIP file sub-directory.*

MCU

1 - Arduino Uno board (real or clone). *Note: Only genuine Arduino's will identify as such to the IDE and be automatically setup by it. Clones require manual board type and communications port user selection and assignment.*

DDS

1 - AD9850 DDS module, new 125 MHz SMD crystal version preferred but older ones should work okay.

DISPLAY

1 – 1602 keypad LCD shield combo which sits on top of the Arduino Uno. SainSmart seems to have created the “original” but I’ve used various from other suppliers and they all follow the same design and coding.

ROTARY ENCODER

1 - KY-40 “brick” rotary (“half-step”) encoder

MISCELLANEOUS

1 – 10K PCB potentiometer (RF level control [optional])

1 - half-size (mini) solderless breadboard (400 tie point) for AD9850 DDS circuit

1 – RF connector (I use solderless breadboard RCA version with RCA to BNC adapter but use whatever you have handy).

1 – back-board to mount solderless breadboard and Arduino Uno. (I ordered several acrylic ones predrilled to fit the Uno with room for a mini-solderless breadboard which has a peel-n-stick backing).

Assorted 22 gauge connecting wires (various colours and lengths), DuPont or equivalent.

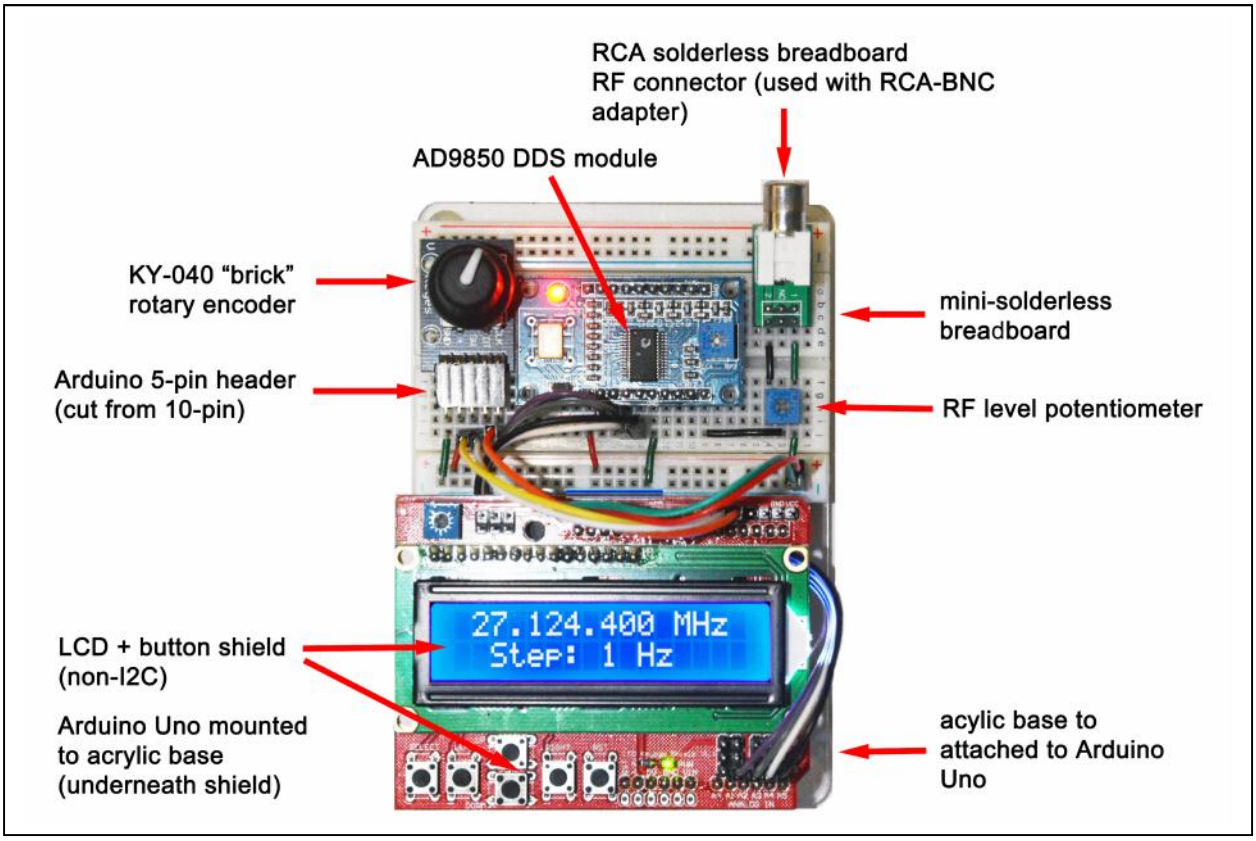

The above pictorial is the assembled Arduino Uno DDS VFO gadget and its components (the Arduino Uno under the LCD keypad shield). The pushbuttons tune the VFO up/down and set the frequency tuning increment/step. The rotary encoder has a built-in shaft pushbutton which also sets the frequency tuning increment/step as well as rotating left/right to tune the VFO up/down. The following two pages show an enlarged DDS VFO pictorial and the wiring pictorial. It's pretty straight-forward so I didn't feel that a detailed schematic was required, in this case.

RELATED PARTS AND SUPPLIERS

I purchase the majority of my electronic components and Arduino supplies from eBay Canada (http://www.ebay.ca/), Alibaba (http://www.alibaba.com), Banggood (http://www.banggood.com) and MiniInTheBox (http://www.miniinthebox.com). Breadboard BNC jacks are hard to find (at least the type required) so I used breadboard RCA jacks (with RCA to BNC adapters) and audio jacks purchased from Omega MCU Systems (http://oms.onebytecpu.com) along with many of their other components. Omega MCU sells a custom designed Arduino shield prototyping printed circuit board which is just superb for building complex DIY Arduino projects.

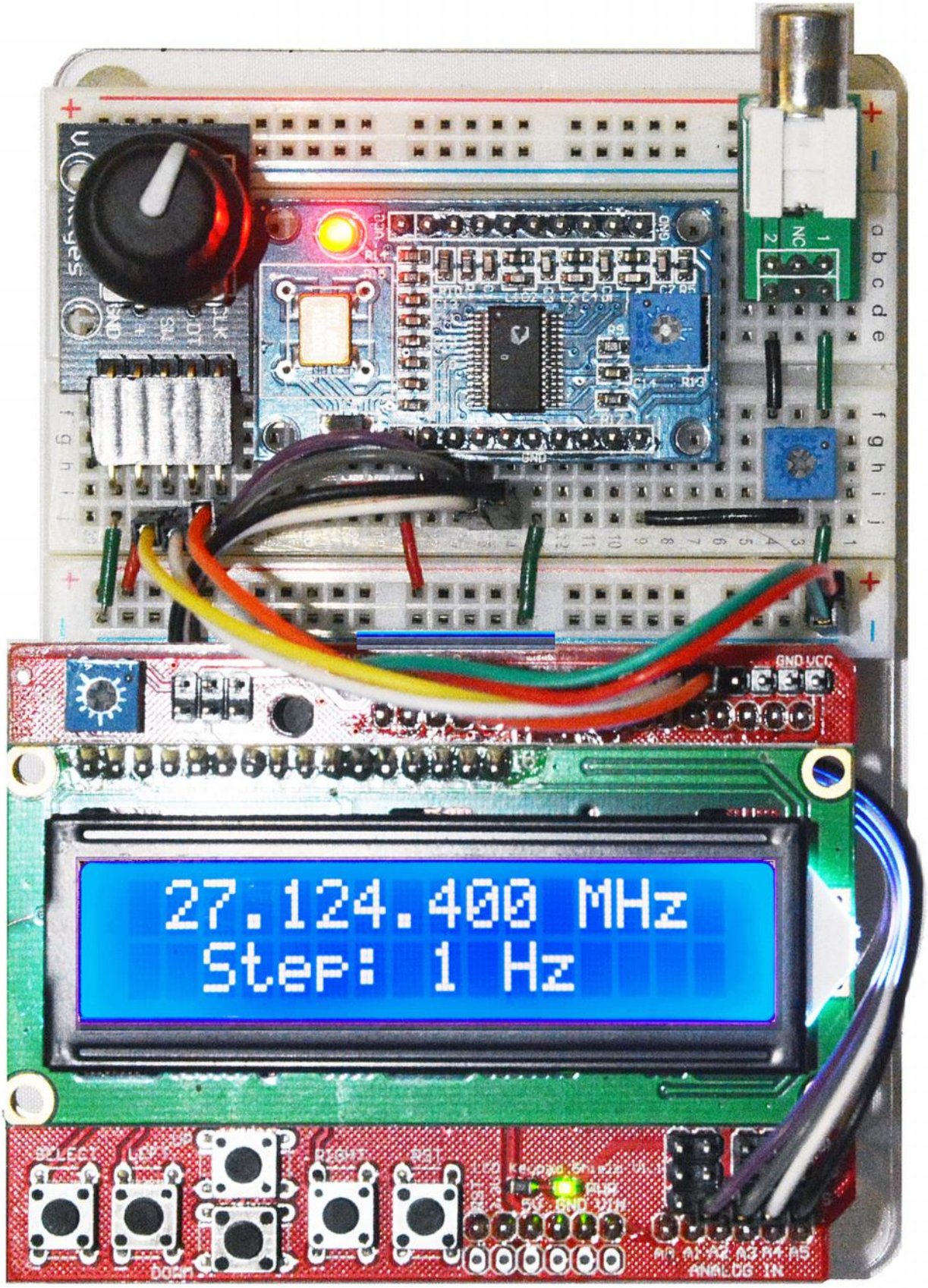
27.124.400 MHz
Step: 1 Hz
SELECT
LEFT
RIGHT
DOWN
ANALOG IN

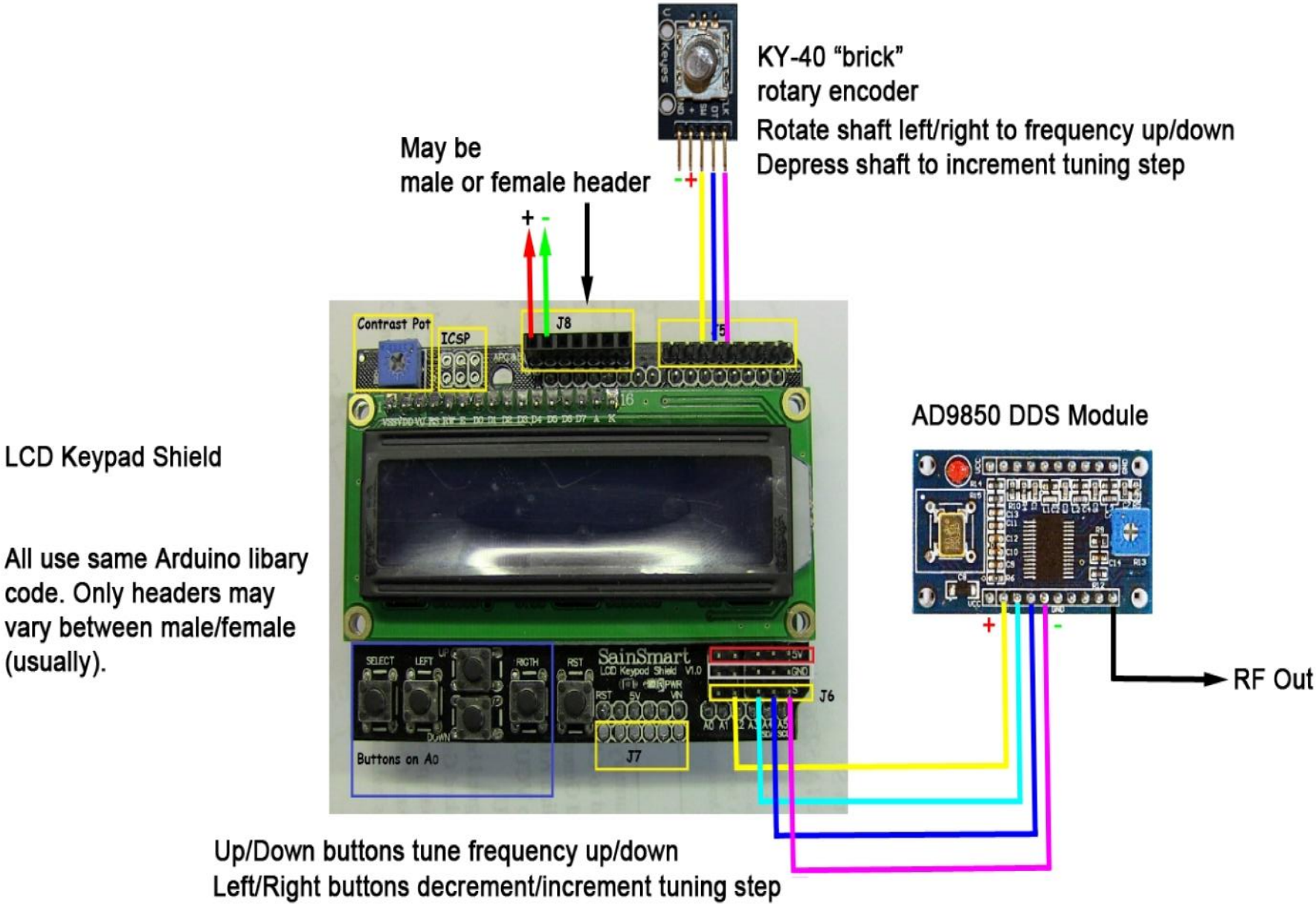
KY-40 “brick”
rotary encoder
Rotate shaft left/right to frequency up/down
Depress shaft to increment tuning step
May be
male or female header
LCD Keypad Shield
All use same Arduino libary code. Only headers may vary between male/female (usually).
Contrast Pot
ICSP
J8
J5
J6
J7
SelectSmart
LCD Keypad Shield V1.0
Buttons on A0
AD9850 DDS Module
RF Out
Up/Down buttons tune frequency up/down
Left/Right buttons decrement/increment tuning step