All Things Digital

Amateur Radio for the 21st Century

020

Robert C. Mazur, VA3ROM
E: va3rom@gmail.com
W: http://www.va3rom.com

First published in the Sep-Oct 2015 issue of <u>The Canadian Amateur</u>

Slow Scan Television (SSTV): Part 1—Genesis

INTRODUCTION

Analog SSTV is a video data mode and belongs to the "fuzzy logic" family whereby we use one (or more) of our senses to interpret the message/meaning (if any). In its original form (late 1950's early 1960's) SSTV systems slowly transmitted/received sequential black and white (B/W) television (TV) still frames converted to audio tones every 8 seconds. This required a pricey combination of commercial/homebuilt video conversion/radio interface equipment. Images could be saved by tape recording the incoming audio, or snapping a photograph of a cathode ray tube (CRT) display.

THE "FATHER" OF SSTV

American born Copthorne "Cop" Macdonald held many callsigns over the years with VY2CM being his last (silent key late 2011). It was as WA2BCW when the 21 year old communications engineering student invented a practical, radio-based SSTV system.

In late 1959, Cop transmitted the first “wireless” SSTV video images across the Atlantic to England (see below). He then went on to promote it (and Amateur Radio) in various publications such as QST, CQ and Mother Earth News trying to get the new mode “legitimized” and accepted, but only experimental SSTV licenses were issued until the late 1960’s. Cop had a successful engineering career in the States then he gave it up, moved to Canada, to become a renowned “New Age” author. In 2007, he was elected to CQ magazine’s “Amateur Radio Hall of Fame”, and was awarded the ARRL’s “Technical Excellence Award” (2009).

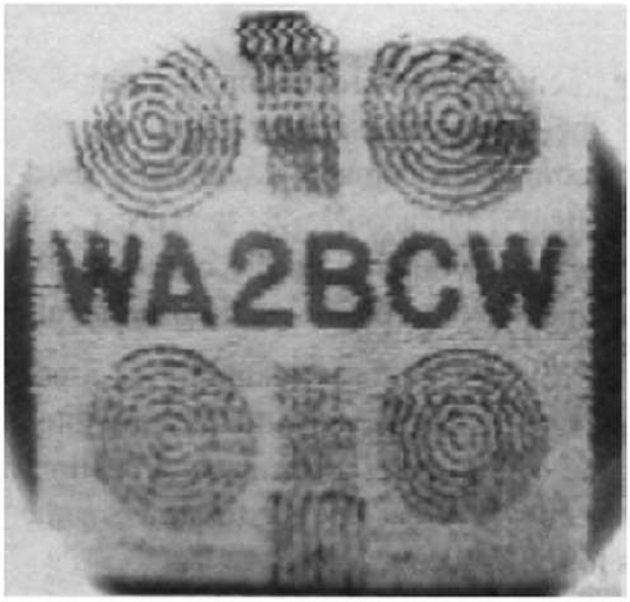

Note: Canadian Amateurs needed an annual “SSTV endorsement” because there was a separate digital certificate issued by the old Department of Communications (DOC). This was reduced to a one-time only requirement (1976) and eliminated, along with the digital certificate, in 1993.

EARLY YEARS

By the mid-1950’s, the National Television System (or Standards) Committee (NTSC) report was adopted establishing the North American TV broadcast standard, and live domestic television (no video tape or satellites) was fast becoming the number one form of home entertainment. I’ll pass things over to Cop and let him tell you of his pioneering work:

“In 1957, I was in the University of Kentucky’s engineering library, thumbing through a technical journal, and came across an article about Bell Labs ‘Picture-Phone’ low image transmission experiments using ordinary phone lines. For the first time I realized that picture transmission didn't necessarily mean extremely wide bandwidth and wondered if a practical slow-scan television system could be worked out for ham radio! Over the next few months, my spare time was spent looking into the feasibility of the idea. What display tubes were available? (Answer: P7 phosphor.) How do you get frequency response down to DC if ham rig audio response cuts off at 300 Hz? (Answer: Modulate an audio subcarrier.) I took my feasibility study paper to the head of the EE Department and asked him if I could design and build such a system for my upperclassman paper—he agreed! The next 6 months was spent designing, building and putting together all the various SSTV stages, and it worked! What is now the Citizen's Band (CB) was at that time the 11 meter ham band and all sorts of experimental and strange emissions were allowed on it. Since only one set of SSTV equipment existed (mine), audio tape recordings of SSTV signals were transmitted from one ham station, and at the receiving station we listened to this weird sound coming out of the receiver's loudspeaker, watching the received pictures being painted in light on the screen of the P7 (long persistence phosphor, radar-type) cathode ray tube (CRT)!

My paper describing a radio based SSTV system was entered in the American Institute of Electrical Engineers student paper competition (1958) and won national first prize! The ham community first heard about SSTV in my articles published in QST magazine (August and September 1958). Shortly thereafter, we lost the 11 meter band to CB radio and had no long-distance experimental HF bands to transmit SSTV signals so I spent the next 10 years working with other hams like Don Miller (W9NTP) and Robert Gervenack (W7FEN) in specially authorized on-air tests to convince the Federal Communications Commission (FCC) that slow-scan TV would cause no problems to regular ham activities and should be permitted in the 75 to 10 meter voice bands as a regular ham radio operating activity. In 1968, the FCC finally authorized SSTV operation on a regular basis in the HF bands.”

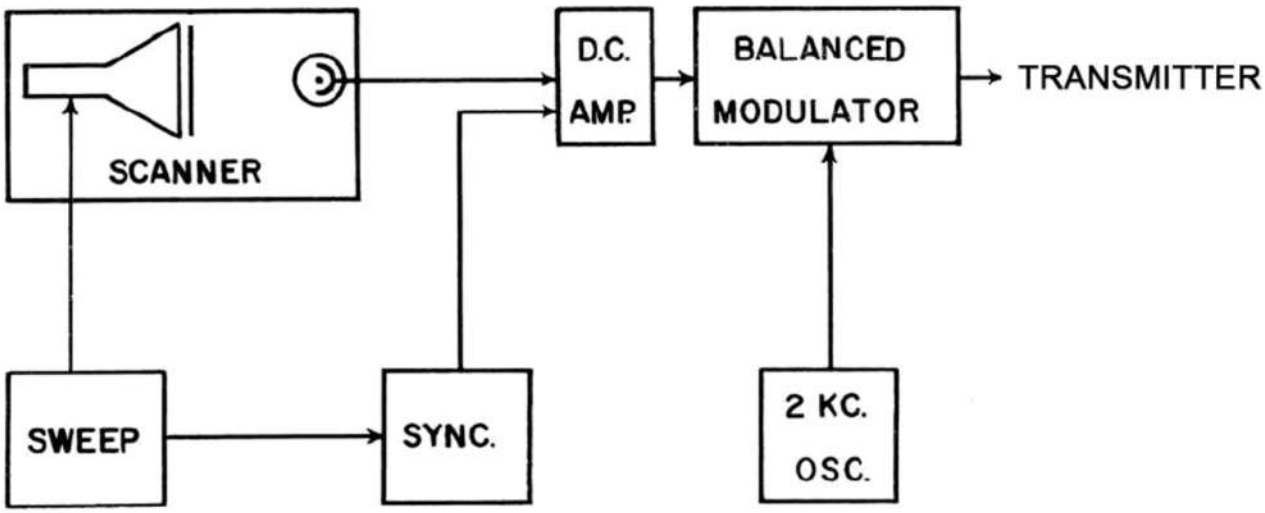

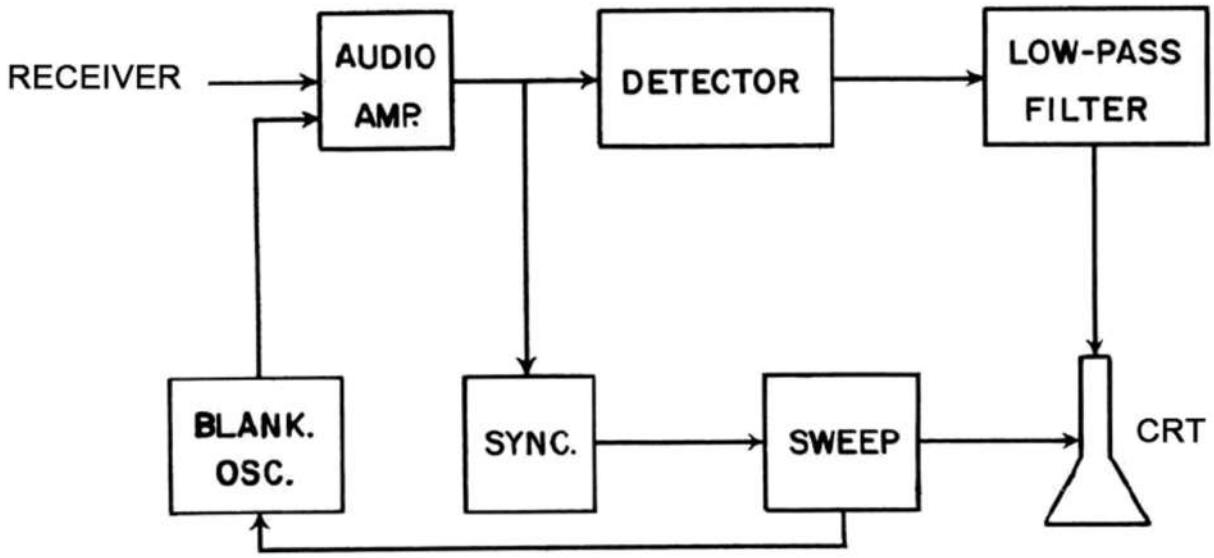

TECHNICAL DETAILS

The original B/W SSTV system (image above) used “sub-carrier” amplitude modulation (SCAM) with a 2000 Hz audio signal. White level was represented by 0-20% modulation, black level by 50-75%, and the vertical/horizontal synchronization (sync) pulses by 100% modulation. The signal fit nicely inside a single side-band (SSB) transceiver’s passband but had 6 times the resolution of Bell’s landline SSTV system, and many more times the transmission speed of radio facsimile (FAX).

Then Cop made a big change (early 1960's) switching to sub-carrier frequency modulation (SCFM) which improved weak-signal reception, minimized signal drift and phase shift. Black level became 1500 Hz, white 2300 Hz, and 1200 Hz for the sync pulses, with a 1900 Hz audio sub-carrier providing grey level plus calibration signal (image below). His early SCFM SSTV system used asynchronous transmission, meaning if a sync pulse was missed the associated scan line was lost, but modern SCFM SSTV now uses synchronous or "free run" transmission so you'll see something—noise, signal, or a mixture.

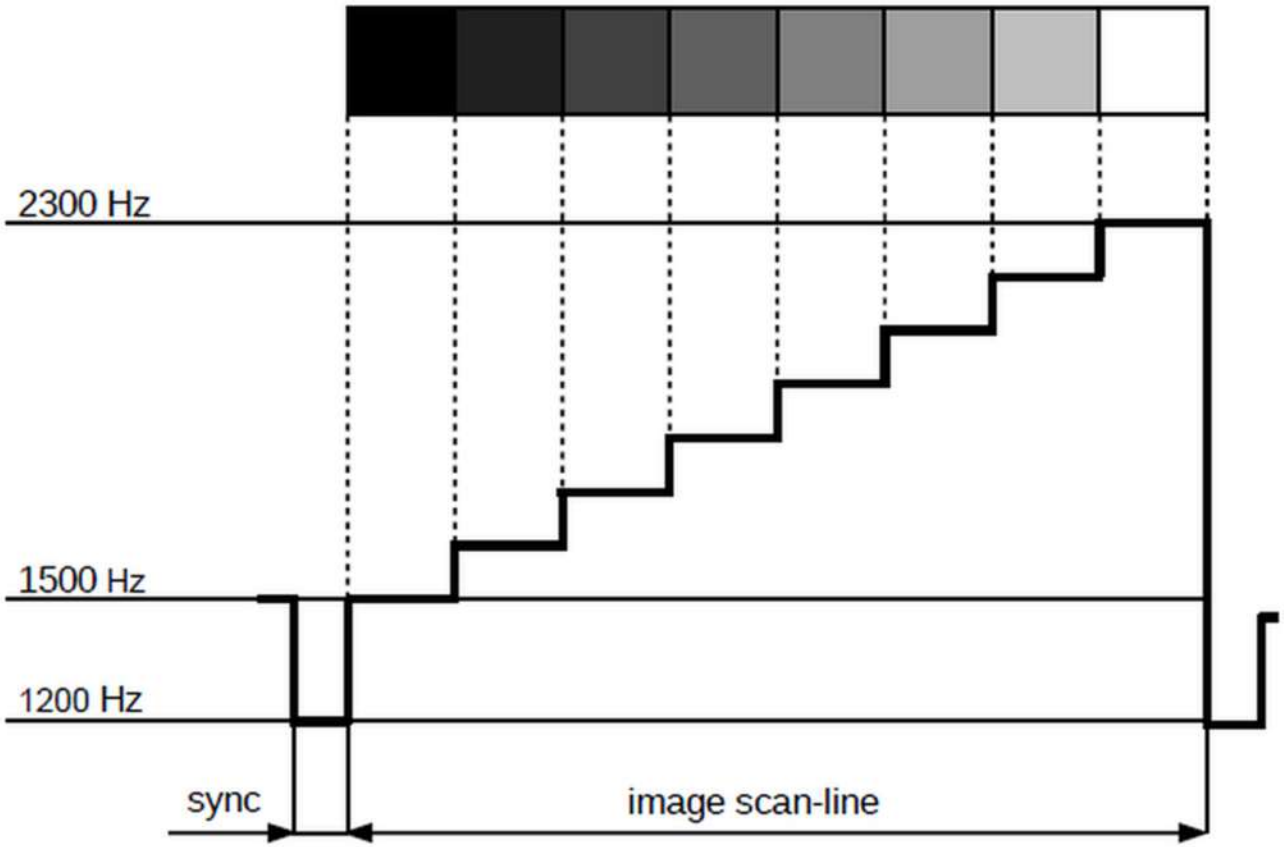

However, with the cost, required equipment, and technical prowess need, SSTV just didn't "take off" with most Amateurs, despite the work of Cop and others.

ROBOT RESEARCH TO THE RESCUE

In 1970, SSTV for the Amateur Radio “masses” became a reality when the first affordable “all-in-wonder” SSTV video camera and frame grabber/scan converter equipment, manufactured by Robot Research, entered the market (image below). It was a true “plug and play” system because you didn’t have to build any hardware, or be an electrical engineer to get on the air!

What was really revolutionary was the introduction (initially only for “Robot” SSTV modes) of the vertical interval signaling (VIS) digital header which provides for the SSTV mode type, simple parity checking, longer sync pulses, and synchronous reception. This meant sync pulses weren’t necessarily required after the VIS was received because the hardware could internally generate any missing vertical and/or horizontal sync pulses (image next page).

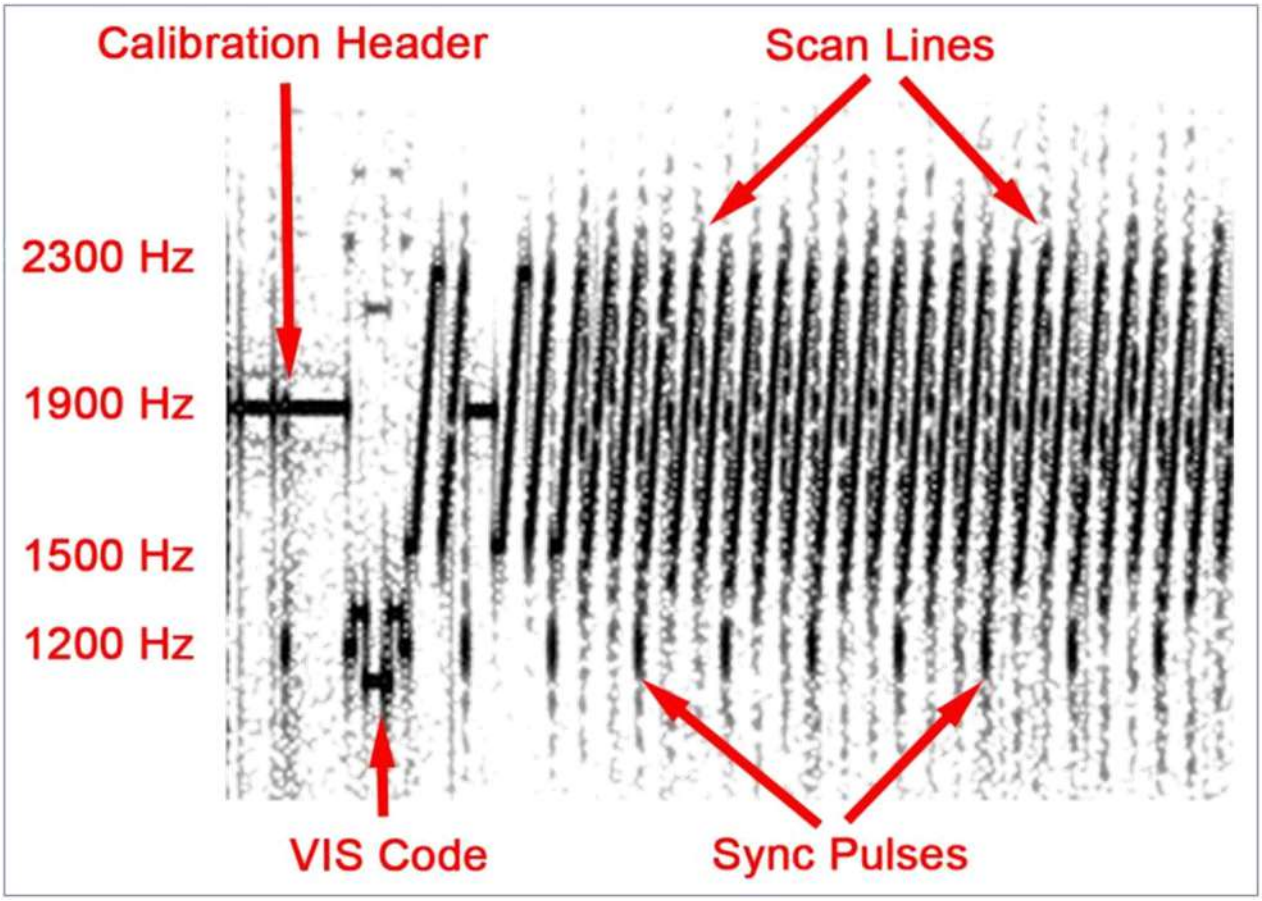

Cop explained how frame grabbers/scan converters worked in this excerpt from his New Directions Radio column “How the Slow Scan Television Works”, Mother Earth News, March-April 1977.

> “A standard 525-line, 30-frames-per-second TV signal is fed into the scan-converter unit and this would normally originate from a small closed-circuit TV camera, but it could just as easily be a cable TV signal, an off-the-air broadcast TV transmission, scanner or the output of a video tape recorder. Every eight seconds, the converter "snatches" a single black and white frame from the stream of incoming video information and freezes that image in its digital memory. This stored picture is then converted to the appropriate audio tones and slowly transmitted over the next eight seconds as a slow-scan TV signal which can be sent via radio or landlines, and/or recorded on audio tape for later [re]transmission.”

> “In receiving mode, the scan-converter "writes" incoming slow-scan pictures into digital storage during the eight seconds it takes each frame to arrive, then reads this picture information out from memory (non-destructively) at 30 frames-per-second into an ordinary TV monitor and displayed as a bright, non-fading picture for as long as one cares to view it. Scan-converters also have "continuous update" capability wherein each newly arriving image replaces the old one line by line.”

THE PC AND SSTV (LATE 20TH CENTURY)

In 1977, Robert Suding, W0LMD, was the first to use a “micro” or “personal” computer” (PC) to send/receive SSTV images, and he developed the PC single-frame colour SSTV image (1980). Ben Vester, K3BC, George Steber, WB9LVI, Volker Wraase, DL2RZ, also developed SSTV software, hardware, and new imaging variations.

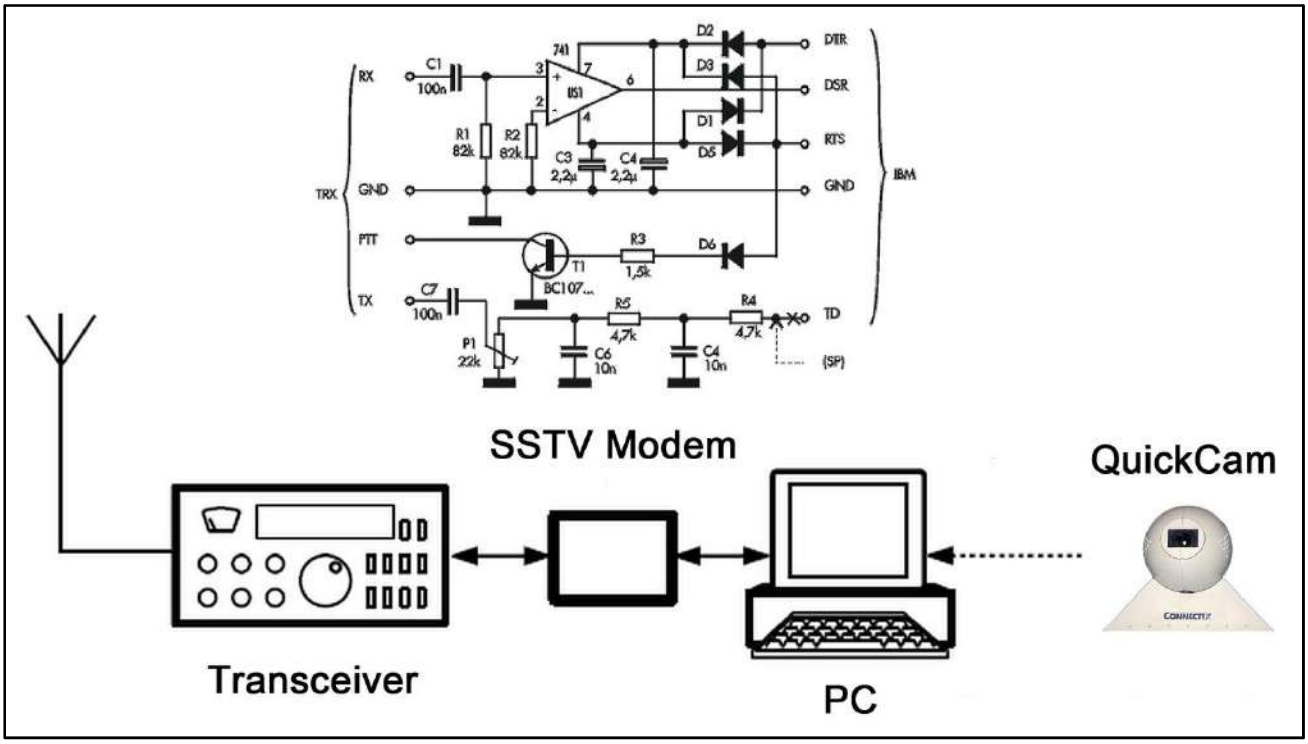

In 1994, the “QuickCam” miniature B/W parallel port video camera became available, along with a computer-radio interface called an SSTV demodulator modulator or “modem” (image above) and SSTV video frame grabbers/scan converters quickly went the way of the Dodo!

ITU MODE RECOGNITION

SSTV is a 100% duty-cycle (continuous carrier) transmission mode, and has its own specific International Telecommunication Union (ITU) designators: J3F, F3F, or A3F:

J = single-sideband with supressed carrier or SSBSC
F = frequency modulation or FM
A = double-sideband amplitude modulation or AM
3 = one channel (frequency) containing analog information F = video (television signals)

MY FINAL

Okay, I'm going to stop here. In part 2, we'll continue on and see how SSTV has been morphed and adapted to 21st century technology.—73

REFERENCES AND RESOURCES

A New Method for Transmitting Images by Radio . . .

A Slow-Scan T.V. System for Image Transmission
Copthorne Macdonald, 1958

ARRL QST Archives
http://tinyurl.com/7tqwg9j

Copthorne Macdonald, VY2CM (SK)
http://tinyurl.com/p7hmf47
http://tinyurl.com/qj7fczw

Image Communication on Short Waves
http://www.sstv-handbook.com

SSTV (Amateur Radio Wiki Net)
http://tinyurl.com/75btsn3

WB9KMW SSTV World & Tutorials
http://tinyurl.com/hsj3xpb

VA3ROM: All Things Digital
http://tinyurl.com/og2acxq